Work Order ID 97175

February-14-13 2:56:24 PM

97175

Item ID: 646.3710 **Accept** *N900040100* **Setup Start** *NS1*

Revision ID: **Stop** *NS2*

Item Name: Doubler

Start Date: 2/14/13 **Start Qty:** 10.00 30 *10*

Required Date: 2/28/13 **Req'd Qty:** 10.00 *10*

Cust Item ID:

Customer:

Reference:

Approvals: **Process Plan:** MLS **Date:** 13-02-19 **Tooling:** **Date:** **Run Start** *NR1*

QC: **Date:** **SPC (Y/N):** **Date:** **Stop** *NR2*

Sequence ID/ Work Center ID	Operation Description	Set Up/ Run Hours	Tool ID	Tool #	Plan Code	Accept Qty	Reject Qty	Reject Number	Insp. Stamp
Draw Nbr	**Revision Nbr**								
646.3700	A								
110		0.00							
110									
Purchasing									
Purchasing	**Memo**	0.00							
	Issue P/O: 19184								
	Manufacture as per dwg								
	Possible supplier: SOUTHLANDFABRICATION								
	Material release note is required.								
						CX 13/02/26	(30)		
120	Receive & Inspect for Damage & Mat'l Certs	0.00							
120									
Packaging									
Packaging	**Memo**	0.00							
						30X			SP 13-4-5
130	QC6- Inspect dimensions to drawing	0.00							
130									
QC									
Quality Control	**Memo**	0.00 BLS							
						30X			

DQA: _____ Date: _____

NCR: Yes / No

WORK ORDER NON-CONFORMANCE / UPDATE

QA Closed: Date:

Work Order: _____

Part No. _____

NCR No. _____

DISPOSITION

- Rework ☐
- Scrap ☐
- Use-as-is ☐
- Work Order Update ☐

AGAINST DEPARTMENT/PROCESS

- Skid-tube ☐
- Machining ☐
- Thermoforming ☐
- Large Fab ☐
- Crosstube ☐
- Small Fab ☐
- Finishing ☐
- Composite ☐
- Water Jet ☐
- Prod. Eng. Coor. ☐
- Rec/Store/Packaging ☐
- Supplier ☐
- Engineering ☐
- Quality ☐
- Other ☐

Root Cause		Date	Step	Qty	Description of work order update or Non-conformance	Initial Chief Eng	Action Description	Sign & Date	Verification	QC Inspector
Doc/Data										
Equip/Tooling										
Operator										
Material										
Setup										
Other										
Process										
Supplier										
Training										
Unapproved										

FAULT CATEGORY

Landing Gear

- ☐ Bending
- ☐ Centre Not Concentric to O/S
- ☐ Cracks
- ☐ Crushed/Crimped
- ☐ Cuffs
- ☐ Heat Treat
- ☐ Inspection Strip in Tube
- ☐ Ripples in Bend
- ☐ Torque Waves in Extrusion
- ☐ Turning Sequence
- ☐ Wave/Twist in Tube

General

- ☐ Bend
- ☐ BOM/Route
- ☐ Broken/Damaged
- ☐ Burrs
- ☐ Contamination
- ☐ Countersink
- ☐ Cut Too Short
- ☐ Drill Holes
- ☐ Drawing
- ☐ Finish
- ☐ Folio
- ☐ Grain
- ☐ Hardware
- ☐ Inspection Incomplete
- ☐ Instructions Incomplete/Unclear
- ☐ Maintenance
- ☐ Mislabeled
- ☐ Misread
- ☐ Offset
- ☐ Out of Calibration
- ☐ Out of Sequence
- ☐ Outside Dimensions
- ☐ Ovalized
- ☐ Over/Under tolerance
- ☐ Part Incorrect
- ☐ Part Lost/Missing
- ☐ Part Moved
- ☐ Positioned Wrong
- ☐ Power Loss/Surge
- ☐ Pressure/Forced
- ☐ Temperature/Cure
- ☐ Weld
- ☐ Wrong Stock Pulled
- ☐ Other _____

Work Order ID 97175

February-14-13 2:56:24 PM

97175

Item ID: 646.3710
Revision ID:
Item Name: Doubler

Start Date: 2/14/13 **Start Qty:** 10.00 *10*
Required Date: 2/28/13 **Req'd Qty:** 10.00 *10*
Reference:

Accept *N900040100*

Setup Start *NS1*
Stop *NS2*

Cust Item ID:
Customer:

Approvals: **Process Plan:** _____ **Date:** _____ **Tooling:** _____ **Date:** _____
QC: _____ **Date:** _____ **SPC (Y/N):** _____ **Date:** _____

Run Start *NR1*
Stop *NR2*

Sequence ID/ Work Center ID	Operation Description	Set Up/ Run Hours	Tool ID	Tool #	Plan Code	Accept Qty	Reject Qty	Reject Number	Insp. Stamp
140	Outsource process-Anodize per QSI017 4.1.10.1	0.00							
140 Outsource4 Outsource process - Anodize	**Memo** ANODIZE AS PER DWG ISSUE PO: 19184	0.00				CL 13/02/26 30			
150	Receive & Inspect for Damage & Mat'l Certs	0.00							
150 Packaging Packaging	**Memo**	0.00							
160	QC5- Inspect part completeness to step on W/O	0.00							
160 QC Quality Control	**Memo**	0.00							

n/a 13/04/05

n/a

DQA: _____ Date: _____

NCR: Yes / No

WORK ORDER NON-CONFORMANCE / UPDATE

QA Closed: Date:

Work Order: _____

Part No. _____

NCR No. _____

DISPOSITION

- Rework ☐
- Scrap ☐
- Use-as-is ☐
- Work Order Update ☐

AGAINST DEPARTMENT/PROCESS

- Skid-tube ☐
- Machining ☐
- Thermoforming ☐
- Large Fab ☐
- Crosstube ☐
- Small Fab ☐
- Finishing ☐
- Composite ☐
- Water Jet ☐
- Prod. Eng. Coor. ☐
- Rec/Store/Packaging ☐
- Supplier ☐
- Engineering ☐
- Quality ☐
- Other ☐

Root Cause		Date	Step	Qty	Description of work order update or Non-conformance	Initial Chief Eng	Action Description	Sign & Date	Verification	QC Inspector
Doc/Data	☐									
Equip/Tooling	☐									
Operator	☐									
Material	☐									
Setup	☐									
Other	☐									
Process	☐									
Supplier	☐									
Training	☐									
Unapproved	☐									

FAULT CATEGORY

Landing Gear

- ☐ Bending
- ☐ Centre Not Concentric to O/S
- ☐ Cracks
- ☐ Crushed/Crimped
- ☐ Cuffs
- ☐ Heat Treat
- ☐ Inspection Strip in Tube
- ☐ Ripples in Bend
- ☐ Torque Waves in Extrusion
- ☐ Turning Sequence
- ☐ Wave/Twist in Tube

General

- ☐ Bend
- ☐ BOM/Route
- ☐ Broken/Damaged
- ☐ Burrs
- ☐ Contamination
- ☐ Countersink
- ☐ Cut Too Short
- ☐ Drill Holes
- ☐ Drawing
- ☐ Finish
- ☐ Folio
- ☐ Grain
- ☐ Hardware
- ☐ Inspection Incomplete
- ☐ Instructions Incomplete/Unclear
- ☐ Maintenance
- ☐ Mislabeled
- ☐ Misread
- ☐ Offset
- ☐ Out of Calibration
- ☐ Out of Sequence
- ☐ Outside Dimensions
- ☐ Ovalized
- ☐ Over/Under tolerance
- ☐ Part Incorrect
- ☐ Part Lost/Missing
- ☐ Part Moved
- ☐ Positioned Wrong
- ☐ Power Loss/Surge
- ☐ Pressure/Forced
- ☐ Temperature/Cure
- ☐ Weld
- ☐ Wrong Stock Pulled
- ☐ Other

_____

_____

_____

Work Order ID 97175

February-14-13 2:56:24 PM

97175

Item ID: 646.3710

Revision ID:

Item Name: Doubler

Accept *N900040100*

Setup **Start** *NS1*

Stop *NS2*

Start Date: 2/14/13 **Start Qty:** 10.00 *10*

Required Date: 2/28/13 **Req'd Qty:** 10.00 *10*

Cust Item ID:

Customer:

Reference:

Approvals: **Process Plan:** _____ **Date:** _____ **Tooling:** _____ **Date:** _____

QC: _____ **Date:** _____ **SPC (Y/N):** _____ **Date:** _____

Run **Start** *NR1*

Stop *NR2*

Sequence ID/ Work Center ID	Operation Description	Set Up/ Run Hours	Tool ID	Tool #	Plan Code	Accept Qty	Reject Qty	Reject Number	Insp. Stamp
170 *170* SprayPaint Spray Painting	**Memo** PRIME AS PER DWG (SEE NOTE 2) BATCH:_____	0.00 0.00							
180 *180* QC Quality Control	~~QC14~~ Inspect Spray Paint QC6 **Memo**	0.00 0.00							
190 *190* Packaging Packaging	Receive & Inspect for Damage & Mat'l Certs **Memo** ***IDENTIFY AS PER APICAL MPP-120 BY STAMPING P# AND REV***	0.00 0.00							

u/a

u/a 03/04/05

stock st425

13/4/05

30

DQA: _____ Date: _____

NCR: Yes / No

WORK ORDER NON-CONFORMANCE / UPDATE

QA Closed: Date:

Work Order: _____

Part No. _____

NCR No. _____

DISPOSITION

- Rework ☐
- Scrap ☐
- Use-as-is ☐
- Work Order Update ☐

AGAINST DEPARTMENT/PROCESS

- Skid-tube ☐
- Machining ☐
- Thermoforming ☐
- Large Fab ☐
- Crosstube ☐
- Small Fab ☐
- Finishing ☐
- Composite ☐
- Water Jet ☐
- Prod. Eng. Coor. ☐
- Rec/Store/Packaging ☐
- Supplier ☐
- Engineering ☐
- Quality ☐
- Other ☐

Root Cause		Date	Step	Qty	Description of work order update or Non-conformance	Initial Chief Eng	Action Description	Sign & Date	Verification	QC Inspector
Doc/Data										
Equip/Tooling										
Operator										
Material										
Setup										
Other										
Process										
Supplier										
Training										
Unapproved										

FAULT CATEGORY

Landing Gear

- ☐ Bending
- ☐ Centre Not Concentric to O/S
- ☐ Cracks
- ☐ Crushed/Crimped
- ☐ Cuffs
- ☐ Heat Treat
- ☐ Inspection Strip in Tube
- ☐ Ripples in Bend
- ☐ Torque Waves in Extrusion
- ☐ Turning Sequence
- ☐ Wave/Twist in Tube

General

- ☐ Bend
- ☐ BOM/Route
- ☐ Broken/Damaged
- ☐ Burrs
- ☐ Contamination
- ☐ Countersink
- ☐ Cut Too Short
- ☐ Drill Holes
- ☐ Drawing
- ☐ Finish
- ☐ Folio
- ☐ Grain
- ☐ Hardware
- ☐ Inspection Incomplete
- ☐ Instructions Incomplete/Unclear
- ☐ Maintenance
- ☐ Mislabeled
- ☐ Misread
- ☐ Offset
- ☐ Out of Calibration
- ☐ Out of Sequence
- ☐ Outside Dimensions
- ☐ Ovalized
- ☐ Over/Under tolerance
- ☐ Part Incorrect
- ☐ Part Lost/Missing
- ☐ Part Moved
- ☐ Positioned Wrong
- ☐ Power Loss/Surge
- ☐ Pressure/Forced
- ☐ Temperature/Cure
- ☐ Weld
- ☐ Wrong Stock Pulled
- ☐ Other

_____

_____

_____

Work Order ID 97175

February-14-13 2:56:24 PM

97175

Item ID: 646.3710
Revision ID:
Item Name: Doubler

Accept *N900040100*

Setup Start *NS1*
Stop *NS2*

Start Date: 2/14/13 **Start Qty:** 10.00 *10*
Required Date: 2/28/13 **Req'd Qty:** 10.00 *10*
Reference:

Cust Item ID:
Customer:

Approvals: **Process Plan:** **Date:** **Tooling:** **Date:**
QC: **Date:** **SPC (Y/N):** **Date:**

Run Start *NR1*
Stop *NR2*

Sequence ID/ Work Center ID	Operation Description	Set Up/ Run Hours	Tool ID	Tool #	Plan Code	Accept Qty	Reject Qty	Reject Number	Insp. Stamp
200	QC21- Final Inspection - Work Order Release	0.00					13/4/8		
200									
QC	**Memo**	0.00							
Quality Control									

B-04-8

DQA: _____ Date: _____

NCR: Yes / No

WORK ORDER NON-CONFORMANCE / UPDATE

QA Closed: Date:

Work Order: _____

Part No. _____

NCR No. _____

DISPOSITION

- Rework ☐
- Scrap ☐
- Use-as-is ☐
- Work Order Update ☐

AGAINST DEPARTMENT/PROCESS

- Skid-tube ☐
- Machining ☐
- Thermoforming ☐
- Large Fab ☐
- Crosstube ☐
- Small Fab ☐
- Finishing ☐
- Composite ☐
- Water Jet ☐
- Prod. Eng. Coor. ☐
- Rec/Store/Packaging ☐
- Supplier ☐
- Engineering ☐
- Quality ☐
- Other ☐
- ☐

Root Cause		Date	Step	Qty	Description of work order update or Non-conformance	Initial Chief Eng	Action Description	Sign & Date	Verification	QC Inspector
Doc/Data										
Equip/Tooling										
Operator										
Material										
Setup										
Other										
Process										
Supplier										
Training										
Unapproved										

FAULT CATEGORY

Landing Gear

- ☐ Bending
- ☐ Centre Not Concentric to O/S
- ☐ Cracks
- ☐ Crushed/Crimped
- ☐ Cuffs
- ☐ Heat Treat
- ☐ Inspection Strip in Tube
- ☐ Ripples in Bend
- ☐ Torque Waves in Extrusion
- ☐ Turning Sequence
- ☐ Wave/Twist in Tube

General

- ☐ Bend
- ☐ BOM/Route
- ☐ Broken/Damaged
- ☐ Burrs
- ☐ Contamination
- ☐ Countersink
- ☐ Cut Too Short
- ☐ Drill Holes
- ☐ Drawing
- ☐ Finish
- ☐ Folio
- ☐ Grain
- ☐ Hardware
- ☐ Inspection Incomplete
- ☐ Instructions Incomplete/Unclear
- ☐ Maintenance
- ☐ Mislabeled
- ☐ Misread
- ☐ Offset
- ☐ Out of Calibration
- ☐ Out of Sequence
- ☐ Outside Dimensions
- ☐ Ovalized
- ☐ Over/Under tolerance
- ☐ Part Incorrect
- ☐ Part Lost/Missing
- ☐ Part Moved
- ☐ Positioned Wrong
- ☐ Power Loss/Surge
- ☐ Pressure/Forced
- ☐ Temperature/Cure
- ☐ Weld
- ☐ Wrong Stock Pulled
- ☐ Other

_____

_____

_____

Picklist Print

February-14-13 10:52:34 AM

Work Order ID: 97175

Parent Item: 646.3710

Parent Item Name: Doubler

Start Date: 2/14/13 **Required Date:** 2/28/13

Start Qty: 10.00 **Required Qty:** 10.00

Comments: IPP REV:A 12.12.19 NEW ISSUE DD VERF:JLM

Component Item ID/ Item Name	Replacement Item ID	Mfg/ Purch	Bin Item	Primary Location	Last Location	Route Seq ID	Unit of Measure	Qty on Hand	Qty per Kit	Total Qty	Qty Issued	Date Issued	Status
646.3710P Doubler		Manufactured	No				Each	0.0000		~~10~~ 30			

SP13-4-5

DQA: _____ Date: _____

NCR: Yes / No

WORK ORDER NON-CONFORMANCE / UPDATE

QA Closed: Date:

Work Order: _____

Part No. _____

NCR No. _____

DISPOSITION

- Rework ☐
- Scrap ☐
- Use-as-is ☐
- Work Order Update ☐

AGAINST DEPARTMENT/PROCESS

- Skid-tube ☐
- Machining ☐
- Thermoforming ☐
- Large Fab ☐
- Crosstube ☐
- Small Fab ☐
- Finishing ☐
- Composite ☐
- Water Jet ☐
- Prod. Eng. Coor. ☐
- Rec/Store/Packaging ☐
- Supplier ☐
- Engineering ☐
- Quality ☐
- Other ☐

Root Cause		Date	Step	Qty	Description of work order update or Non-conformance	Initial Chief Eng	Action Description	Sign & Date	Verification	QC Inspector
Doc/Data										
Equip/Tooling										
Operator										
Material										
Setup										
Other										
Process										
Supplier										
Training										
Unapproved										

FAULT CATEGORY

Landing Gear

- ☐ Bending
- ☐ Centre Not Concentric to O/S
- ☐ Cracks
- ☐ Crushed/Crimped
- ☐ Cuffs
- ☐ Heat Treat
- ☐ Inspection Strip in Tube
- ☐ Ripples in Bend
- ☐ Torque Waves in Extrusion
- ☐ Turning Sequence
- ☐ Wave/Twist in Tube

General

- ☐ Bend
- ☐ BOM/Route
- ☐ Broken/Damaged
- ☐ Burrs
- ☐ Contamination
- ☐ Countersink
- ☐ Cut Too Short
- ☐ Drill Holes
- ☐ Drawing
- ☐ Finish
- ☐ Folio
- ☐ Grain
- ☐ Hardware
- ☐ Inspection Incomplete
- ☐ Instructions Incomplete/Unclear
- ☐ Maintenance
- ☐ Mislabeled
- ☐ Misread
- ☐ Offset
- ☐ Out of Calibration
- ☐ Out of Sequence
- ☐ Outside Dimensions
- ☐ Ovalized
- ☐ Over/Under tolerance
- ☐ Part Incorrect
- ☐ Part Lost/Missing
- ☐ Part Moved
- ☐ Positioned Wrong
- ☐ Power Loss/Surge
- ☐ Pressure/Forced
- ☐ Temperature/Cure
- ☐ Weld
- ☐ Wrong Stock Pulled
- ☐ Other _____

APICAL INDUSTRIES, INC.	ENGINEERING CHANGE NOTICE NO. 03702				SHEET 1 OF 2
	DWG NO. 646.3700	REV: A	PREPARED BY B. PETERS	DATE: 11/15/12	EFFECT ON DWG ☐ INC. ☒ UNINC.
	DWG TITLE: SHEETMETAL				
	APPROVED BY: ENGR	MFG Darrin Barbon	QC		EFF: NEXT ORDER
TRANSACTION CODES (TC): A-ADD C-CREATE R-REVISE D-DELETE	REASON: ADDED ALTERNATE MATERIAL AND REVISED REFERENCE DIMENSIONS			ECR: D-12-010	

SHEET 1, ZONE A2 IS:

IS

⚠ PRIMARY MATERIAL: ALUMINUM 6061-T6 PER AMS-QQ-A-250/11
ALTERNATE MATERIAL: SS 17-4 PH PER AMS 5604

COPY

97175 MCJ
13-02-19

IS

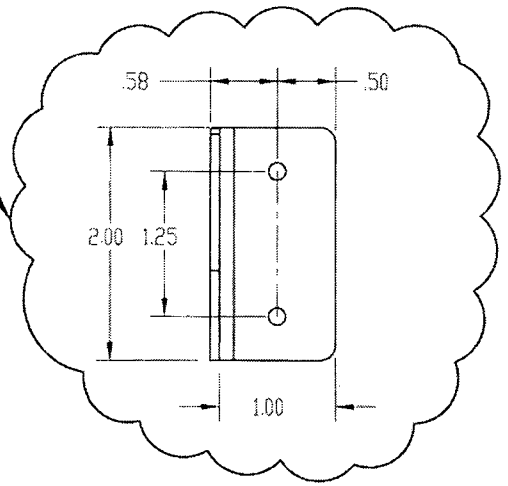

SHEET 7, ZONE B1 IS:

F/N	TC	PART NUMBER	QTY	DESCRIPTION	MATERIAL	SPECIFICATION

DOCUMENTS EFFECTED: ☐ RFMS ☐ MDL ☐ INSTALL INSTRUC ☐ ICA ☐ BOM

CHANGE CATEGORY ☐ MAJOR ☒ MINOR

DER REVIEW REQUIRED ☐ YES ☒ NO

97175

APICAL INDUSTRIES, INC.	ENGINEERING CHANGE ORDER NO. 03702	SHEET 2 OF 2

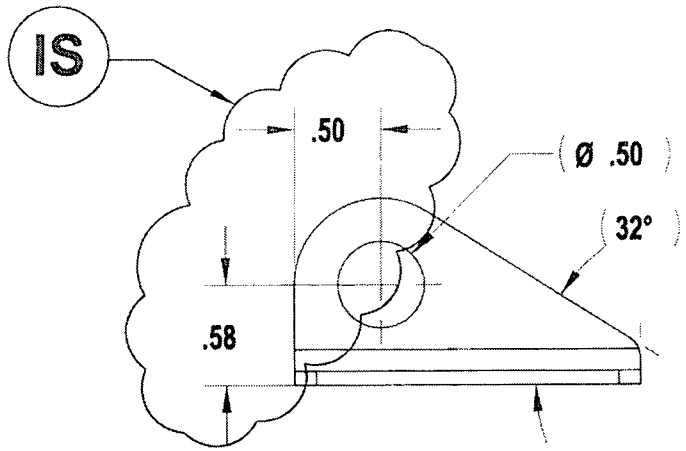

SHEET 7, ZONE C4 IS:

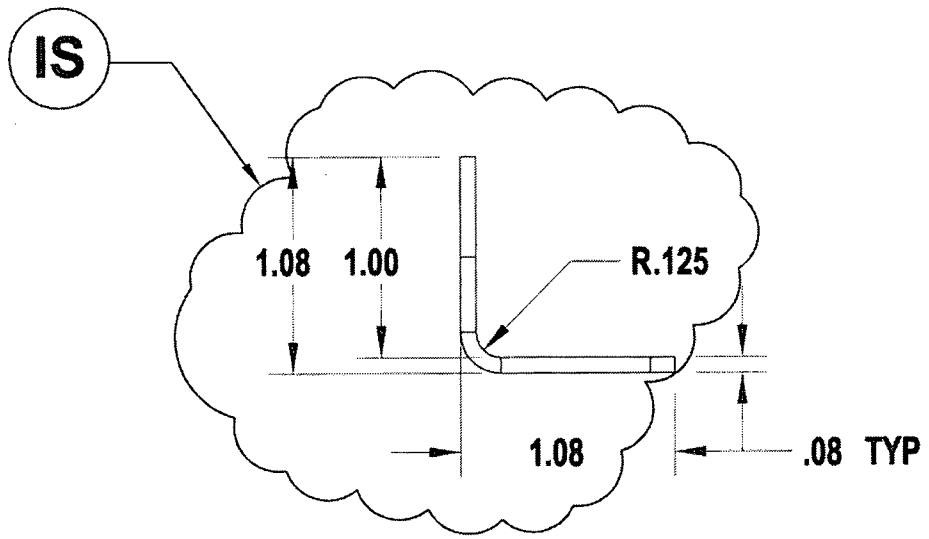

SHEET 7, ZONE D1 IS:

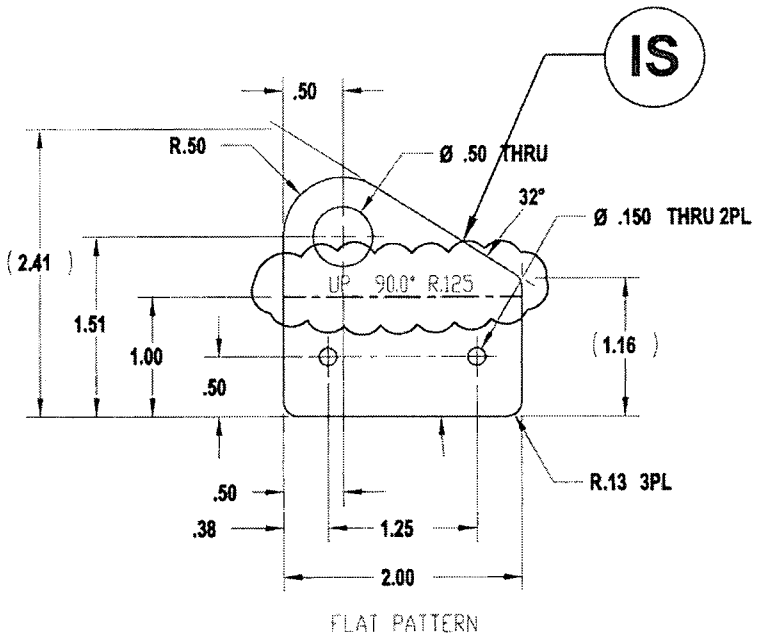

SHEET 7, ZONE B7 IS:

F/N	TC	PART NUMBER	QTY	DESCRIPTION	MATERIAL/SPECIFICATION

97175

NOTES:

1. MATERIAL: ALUMINUM 6061-T6 PER AMS-QQ-A-250/11
2. FINISH: HARD ANODIZE IAW MIL-A-8625 TYPE III, CLASS 2, COLOR BLACK; CARDINAL 4860-50 PRETREATMENT PRIMER PRIME IAW MIL-P-23377J TYPE I CLASS N
3. MATERIAL: 17-4 PH AMS 5604, CONDITION H900
4. FINISH: PRIME IAW MIL-P-23377J TYPE I CLASS N
5. DEBURR AND BREAK ALL SHARP EDGES
6. IDENTIFY IAW MPP-120

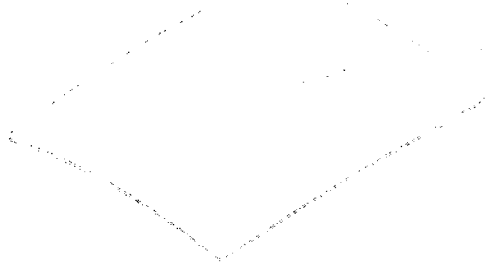

646.3710

UNINCORPORATED ECN(s)

03702

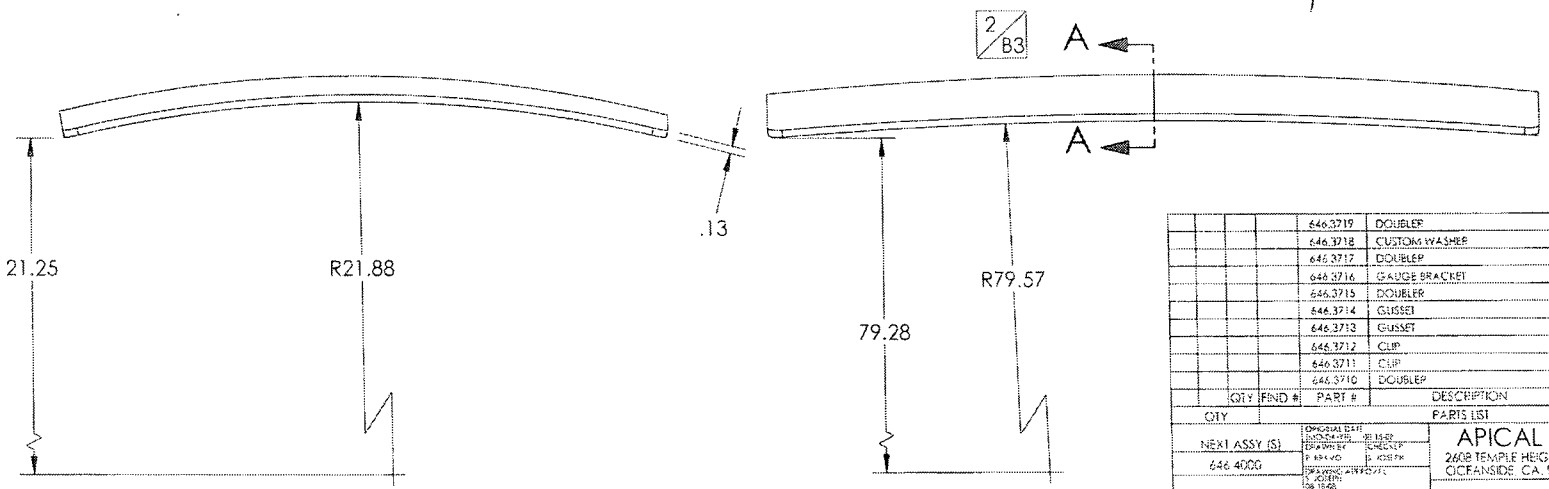

QTY	FIND #	PART #	DESCRIPTION	MAT'L	SPEC.
		646.3719	DOUBLER	1	2
		646.3718	CUSTOM WASHER	1	2
		646.3717	DOUBLER	1	2
		646.3716	GAUGE BRACKET	3	4
		646.3715	DOUBLER	1	2
		646.3714	GUSSET	1	2
		646.3713	GUSSET	1	2
		646.3712	CLIP	1	2
		646.3711	CLIP	1	2
		646.3710	DOUBLER	1	2

QTY — PARTS LIST

NEXT ASSY (S): 646.4000

ORIGINAL DATE: 08-15-08
DRAWN BY: J. JOSEPH
P. 654 VID
DRAWING APPROVED: J. JOSEPH 08-15-08
CONTRACT NO.

UNLESS OTHERWISE SPECIFIED DIMENSIONS ARE IN INCHES
TOLERANCES ARE
2 PLACE DECIMALS ± .01
3 PLACE DECIMALS ± .005
ANGLES ± 1°

APICAL INDUSTRIES
2608 TEMPLE HEIGHTS DR.
OCEANSIDE, CA. 92056-3512 (760)724-5300

SHEETMETAL

SIZE	CAGE CODE	DWG. NO.	REV.
B	07MZ6	646.3700	A

SCALE: NONE — SHEET 1 OF 7

97175

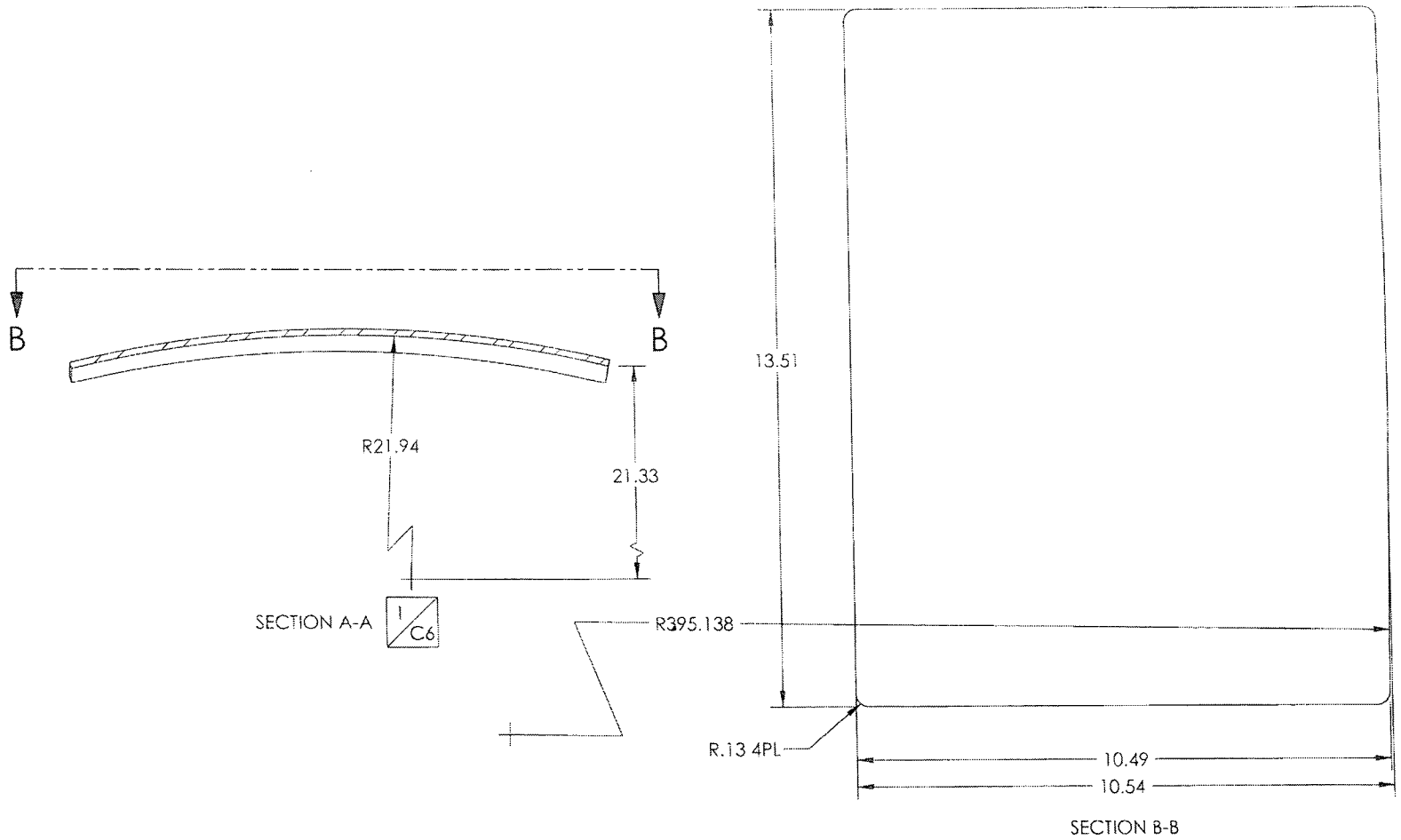

ORIGINAL DATE (MO-DA-YR) 08-18-02	APICAL INDUSTRIES 2608 TEMPLE HEIGHTS DR. OCEANSIDE, CA 92056-3512 (760)724-5300
DRAWN BY P. BRAVO / CHECKED S. JOSEPH	
DRAWING APPROVAL S. JOSEPH	SHEETMETAL
CONTRACT No	
UNLESS OTHERWISE SPECIFIED DIMENSIONS ARE IN INCHES TOLERANCES ARE 2 PLACE DECIMALS ±.01 3 PLACE DECIMALS ±.005 ANGLES ± .5°	SIZE B / CAGE CODE 07M26 / DWG NO 646.3700 / REV A
	SCALE NONE / SHEET 2 OF 9

97175

THE INFORMATION CONTAINED IN THIS DRAWING IS THE SOLE PROPERTY OF APICAL INDUSTRIES. ANY REPRODUCTION IN PART OR WHOLE WITHOUT THE WRITTEN PERMISSION OF APICAL INDUSTRIES IS PROHIBITED.

REVISIONS			
REV.	DESCRIPTION	DATE	APPROVED

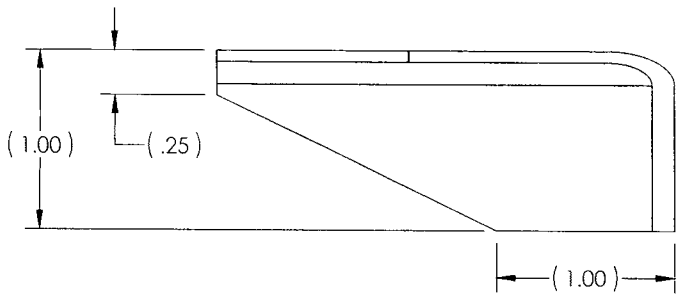

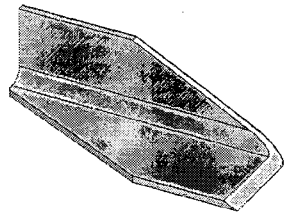

646.3711 SHOWN
646.3712 OPPOSITE

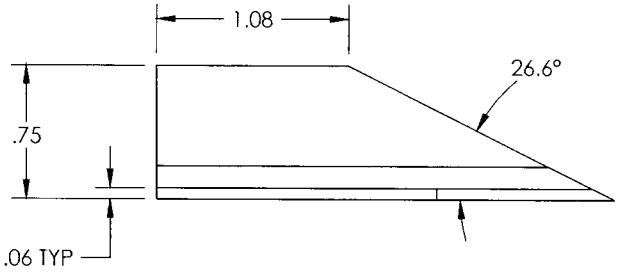

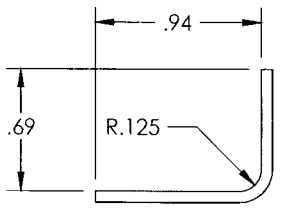

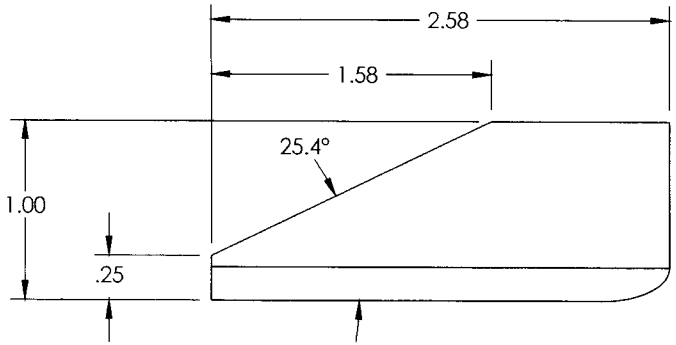

NEXT ASSY (S)	ORIGINAL DATE (DD-MO-YR) 08-18-06	APICAL INDUSTRIES	
	DRAWN BY P. BRAVO / CHECKER S. JOSEPH	2608 TEMPLE HEIGHTS DR. OCEANSIDE, CA. 92056-3512 (760)724-5300	
	DRAWING APPROVAL S. JOSEPH 08-18-06	SHEETMETAL	
	CONTRACT No.		
	UNLESS OTHERWISE SPECIFIED DIMENSIONS ARE IN INCHES TOLERANCES ARE: 2 PLACE DECIMALS ±.01 3 PLACE DECIMALS ±.005 ANGLES ± .5°	SIZE B / CAGE CODE 07MZ6 / DWG. NO. 646.3700 / REV. A	
		SCALE: NONE	SHEET 3 OF 9

97175

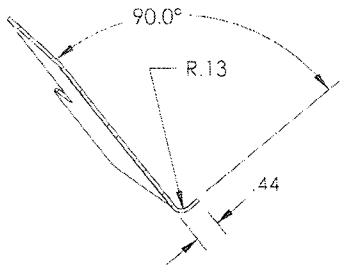

SECTION C-C

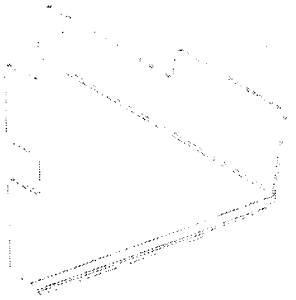

646.3713

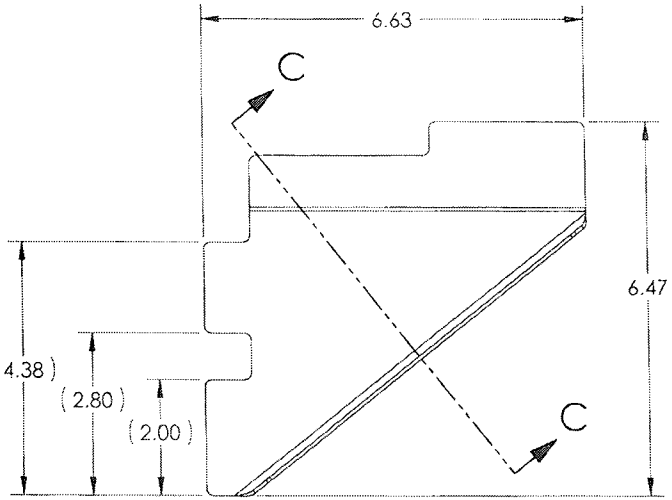

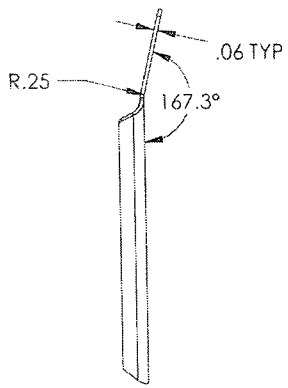

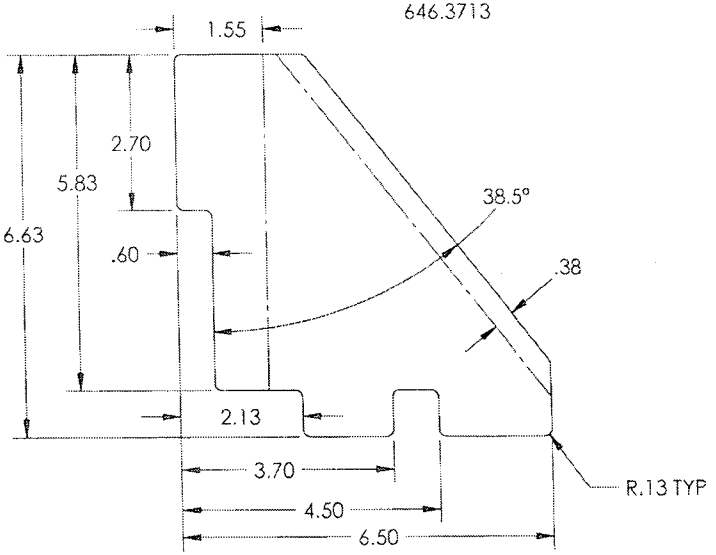

FLAT PATTERN

NEXT ASSY (S)	ORIGINAL DATE 08-19-08	APICAL INDUSTRIES
	DRAWN(S) CHESTER	2608 TEMPLE HEIGHTS DR.
	S JOSEPH	OCEANSIDE, CA. 92056-3512 (760)724-5300
	DRAWING APPROVED S JOSEPH 08-19-08	SHEETMETAL
	COMPLETED	
	UNLESS OTHERWISE SPECIFIED DIMENSIONS ARE IN INCHES TOLERANCES ARE: 2 PLACE DECIMALS ± .01 3 PLACE DECIMALS ± .005 ANGLES ± 1°	SIZE B CAGE CODE 07M26 DWG NO 646.3700 REV A
		SCALE: NONE SHEET 1 OF 1

97175

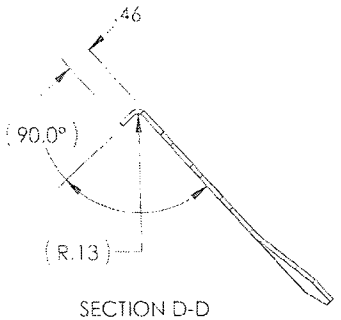

SECTION D-D

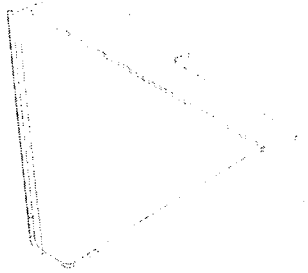

646.3714

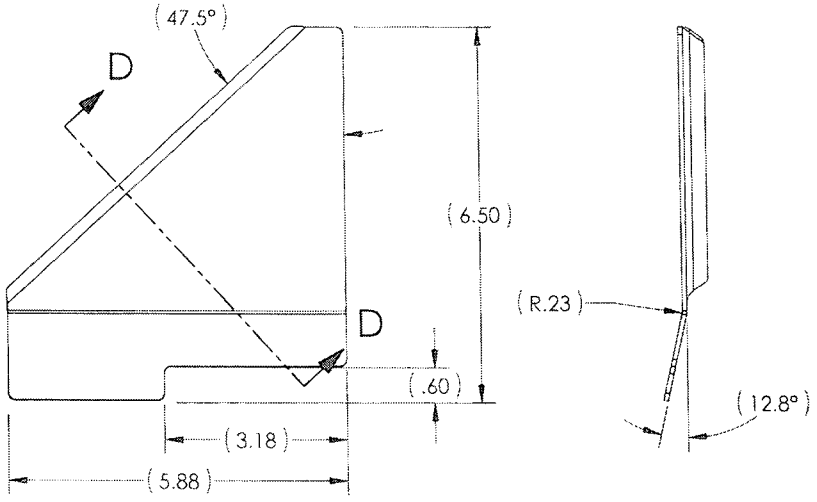

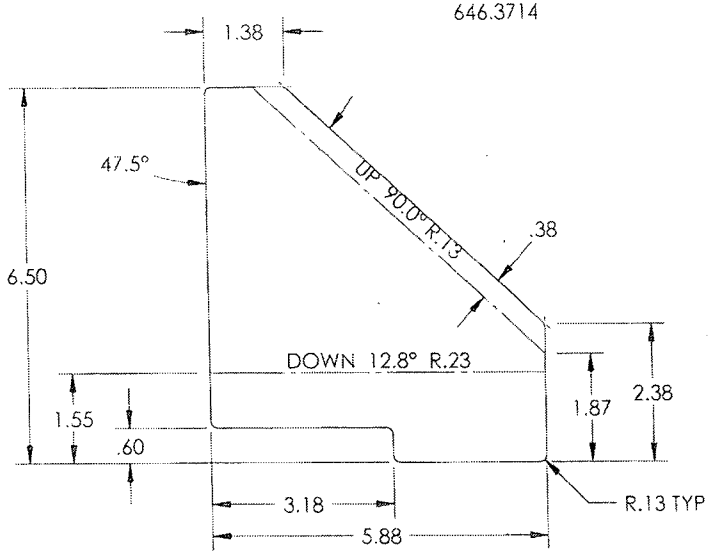

FLAT PATTERN

	APICAL INDUSTRIES 2609 TEMPLE HEIGHTS DR. OCEANSIDE, CA. 92056-3612 (760)724-5300
	SHEETMETAL
SIZE B	CAGE CODE 07MZ6
DWG NO	646.3700
REV A	
SCALE NONE	SHEET 5 OF 9

97175

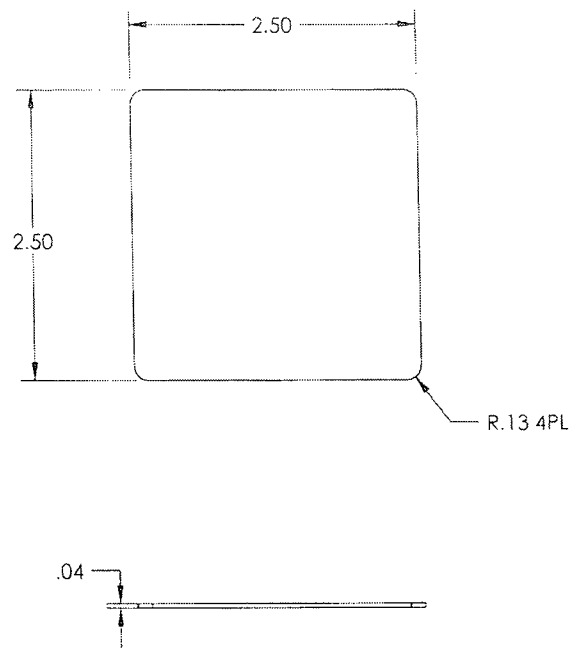

646.3715

NEXT ASSY (S)	ORIGINAL DATE (DA-MO-YR) 08-18-08	APICAL INDUSTRIES 2608 TEMPLE HEIGHTS DR. OCEANSIDE, CA. 92056-3512 (760)724-5300
	DRAWN BY P. BRAVO / CHECKED S. JOSEPH	
	DRAWING APPROVAL S. JOSEPH 08-18-08	SHEETMETAL
	CONTRACT NO.	
	UNLESS OTHERWISE SPECIFIED DIMENSIONS ARE IN INCHES TOLERANCES ARE 2 PLACE DECIMALS ±.01 3 PLACE DECIMALS ±.005 ANGLES ± .5°	SIZE B / CAGE CODE 07M[illegible] / DWG. NO. 646.3700 / REV A
		SCALE: NONE / SHEET 6 OF 9

97175

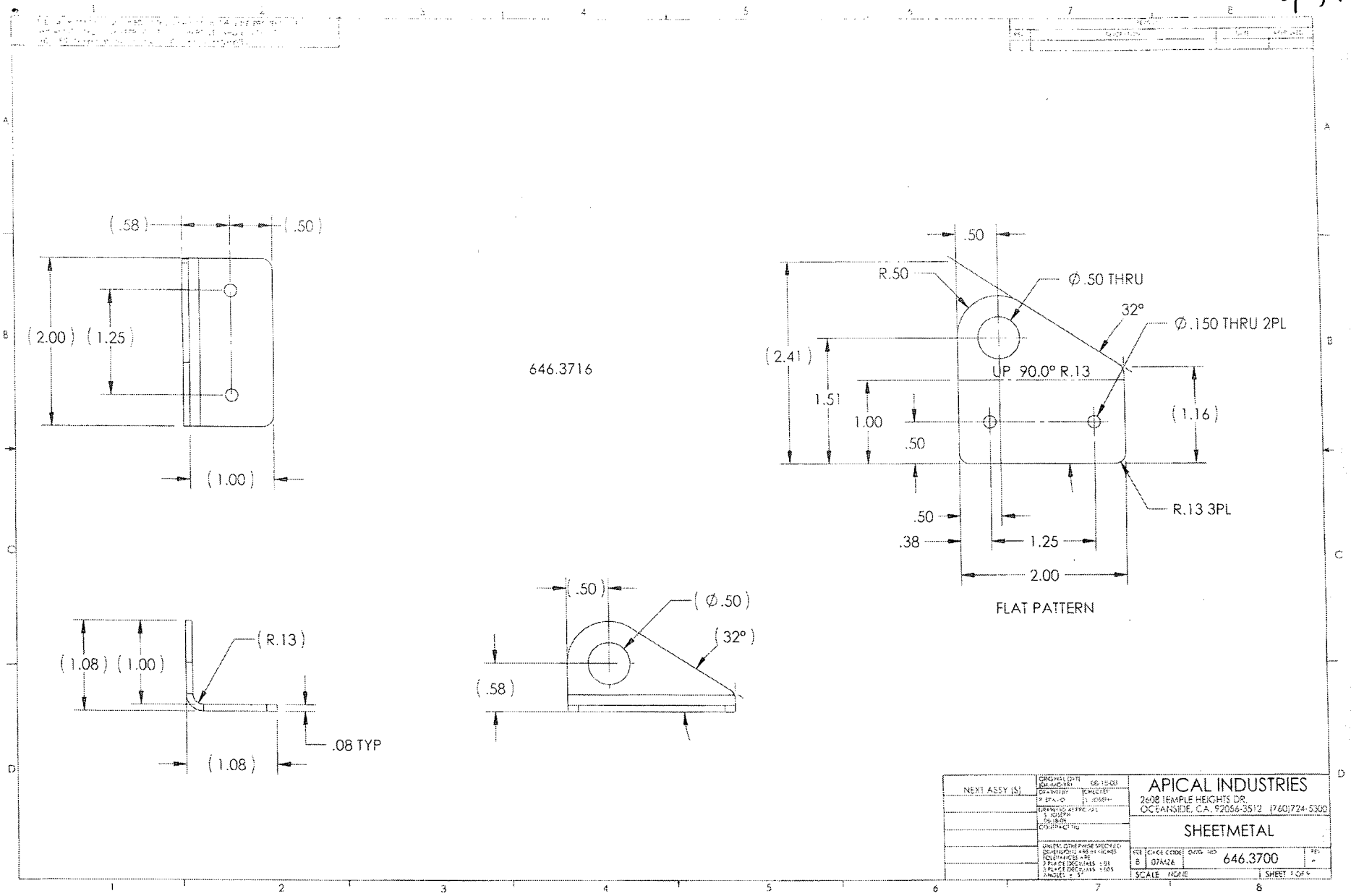

(.58)
(.50)
(2.00)
(1.25)
(1.00)
646.3716
.50
R.50
Ø.50 THRU
32°
Ø.150 THRU 2PL
(2.41)
UP 90.0° R.13
1.51
1.00
.50
(1.16)
R.13 3PL
.50
.38
1.25
2.00
FLAT PATTERN
(.50)
(Ø.50)
(32°)
(.58)
(1.08)
(1.00)
(R.13)
.08 TYP
(1.08)
NEXT ASSY (S)
APICAL INDUSTRIES
2608 TEMPLE HEIGHTS DR.
OCEANSIDE, CA. 92056-3512 (760)724-5300
SHEETMETAL
B
07M26
646.3700
SCALE NONE
SHEET 1 OF 1

97175

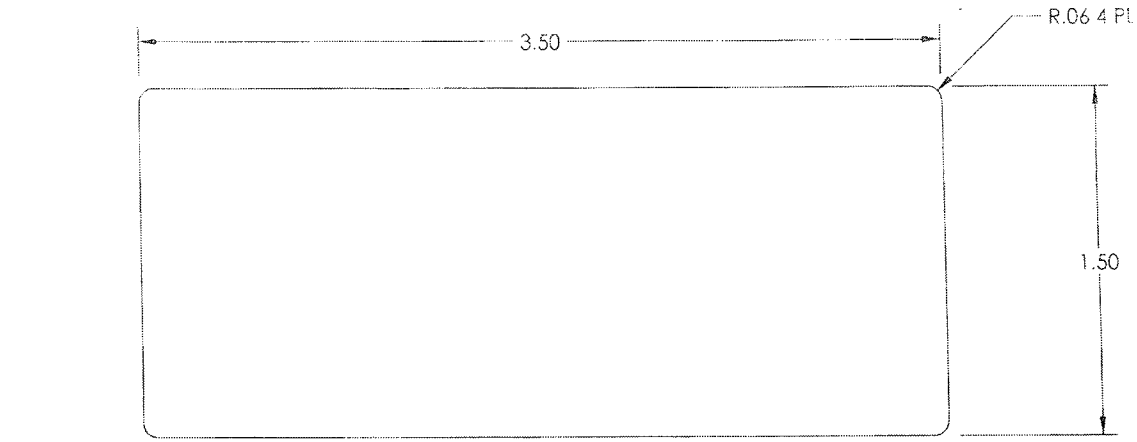

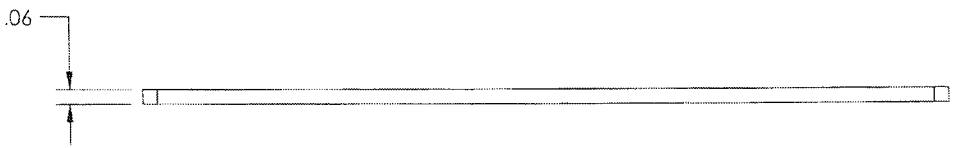

646.3717

NEXT ASSY USED	ORIGINAL DATE 08-15-08	APICAL INDUSTRIES
	REVISED DATE	2608 TEMPLE HEIGHTS DR.
	DRAWN BY	OCEANSIDE, CA. 92056-3512 (760)724-5300
	ENGINEER	SHEETMETAL
	DRAWING APPROVAL	
	QUALITY CONTROL	
	UNLESS OTHERWISE SPECIFIED DIMENSIONS ARE IN INCHES TOLERANCES ARE: 2 PLACE DECIMALS ±.01 3 PLACE DECIMALS ±.005 ANGLES ± 1°	SIZE B / CAGE CODE 07MZ6 / DWG NO 646.3700 / REV A / SCALE NONE / SHEET 1 OF 1

97175

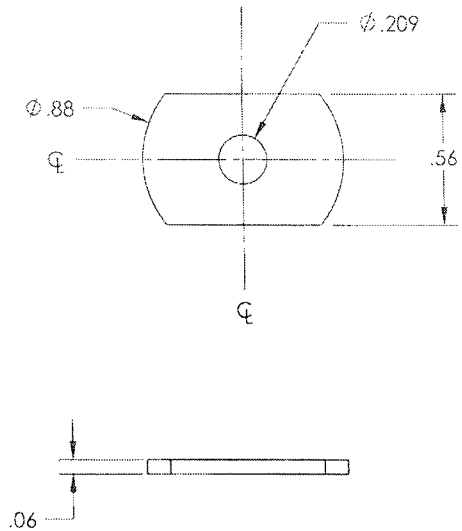

646.3718

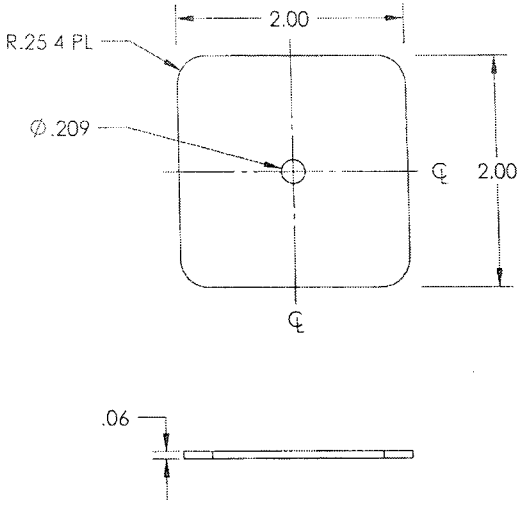

646.3719

NEXT ASSY (S)	ORIGINAL DATE (DA-MO-YR) 08-18-08	APICAL INDUSTRIES 2608 TEMPLE HEIGHTS DR. OCEANSIDE, CA. 92056-3512 (760)724-5300
	DRAWN BY P. BRAVO / CHECKED S. JOSEPH	SHEETMETAL
	DRAWING APPROVAL S. JOSEPH 08-18-08	
	COMPACT No	
	UNLESS OTHERWISE SPECIFIED DIMENSIONS ARE IN INCHES TOLERANCES ARE 2 PLACE DECIMALS ±.01 3 PLACE DECIMALS ±.005 ANGLES ± .5°	SIZE B / CAGE CODE 07M26 / DWG NO 646.3700 / REV A
		SCALE: NONE / SHEET 9 OF 9

SOUTHLAND FABRICATION
411 INDUSTRIAL WAY
FALLBROOK, CA. 92028

PACKING SLIP

No : 00012419

To: Dart Aerospace Ltd
1270 Aberdeen Street
Hawesbury ON K6A 1K7
Canada

ShipTo: Dart Aerospace Ltd
1270 Aberdeen Street
Hawesbury ON K6A 1K7
Canada

Ship VIA	P.O. #	Terms	Date	Page
UPS	PO19184	ORIGIN	04/02/2013	1

Quantity	Part Number	Rev	Job #
30	646.3710 Doubler	A	00011703

SO 13-4-5

Received By: _____ Date: _____

Certificate Of Compliance

Date : 04/02/2013

Job No. : 00011703

Customer : Dart Aerospace Ltd

P.O. Number : PO19184

Part Number : 646.3710 A

Quantity : 30

Description : Doubler

We hereby certify that all parts and/or material supplied by us have been produced in conformance with all contractually applicable purchaser's specification as referenced in the purchase order and/or drawing(s) supplied.

Received By: _____ Date: _____

Moore Wallace

PRESS HARD WHEN WRITING

SHIPPER

1 NAME OF SENDER: Jason Secola — TELEPHONE/TELEX NO. : VERY IMPORTANT: 760-723-4006

COMPANY NAME AND ADDRESS: Southland Fabrication
411 Industrial way
Fallbrook Ca. 92028
COUNTRY: U.S.A.

2 SHIPPER'S IDENTIFICATION NO. FOR CUSTOMS PURPOSES (EIN, ETC.)

5 DATE: 4-3-13

6 NUMBER OF PACKAGES IN SHIPMENT: 1

7 TOTAL WEIGHT IN SHIPMENT: 58

8 SHIPMENT REFERENCE NO.
REFERENCE NUMBER 1
REFERENCE NUMBER 2

CONSIGNEE

3 NAME OF CONTACT PERSON — TELEPHONE/TELEX NO. : VERY IMPORTANT: 613-632-9577

COMPANY NAME AND ADDRESS: Dart Aerospace Ltd.
1270 Aberdeen
Hawkesbury, ON. K6A 1K7
COUNTRY: Canada

4 CONSIGNEE'S IDENTIFICATION NO. FOR CUSTOMS PURPOSES (GST, VAT, IMPORTER'S NO., ETC.)

SOLD TO

9 NAME OF CONTACT PERSON — TELEPHONE/TELEX NO. : VERY IMPO

COMPANY NAME AND ADDRESS

COUNTRY

10 CONSIGNEE'S IDENTIFICATION NO. FOR CUSTOMS PURPOSES (GST, VAT, IMPORTER'S NO

11 DESCRIPTION AND VALUE OF CONTENTS

QUANTITY	COMPLETE DESCRIPTION OF CONTENTS	COUNTRY OF ORIGIN (WHERE MANUFACTURED)	CUSTOMS COMMODITY CODE NUMBER IF KNOWN (HARMONIZED CODE)	UNIT VALUE (US $)	TOTAL VALU (US $)
30	#646.3710P Doubler			268.00	8040.

S013-4-5

12 TOTAL VALUE OF CO (US $)

13 INSURANCE CHA (US $)

14 TRANSPORTATION C (US $)

15 TOTAL INVOICE V (US $)

16 DUTY, TAX, AND BRO SERVICE CHARG

INCLUDED IN TO INVOICE VALU
YES | N

17 COUNTRY OF ULTIMATE DESTINATION

18 VALIDATED LICENSE NUMBER AND EXPIRATION DATE OR GENERAL LICENSE SYMBOL

19 TERMS OF SALE

20 REMARKS

21 FOR SHIPMENTS TO CANADA
CERTIFICATION OF U.S. ORIGIN (INITIAL THE BOX WHEN APPLICABLE)

INITIAL HERE

I CERTIFY THAT THE GOODS REFERENCED IN THIS INVOICE/SALES CONTRACT ORIGINATE UNDER THE RULES OF ORIGIN SPECIFIED FOR THESE GOODS IN THE NORTH AMERICAN FREE TRADE AGREEMENT (NAFTA), AND THAT FURTHER PRODUCTION OR ANY OTHER OPERATION OUTSIDE THE TERRITORIES OF THE PARTIES HAS NOT OCCURRED SUBSEQUENT TO

DART aerospace
Dart Aerospace Ltd.
1270 Aberdeen Street
Hawkesbury, ON K6A 1K7
Tel: 613 632 9577
Fax: 613 632 1053

PURCHASE ORDER

Purchase Order ID PO19184

Purchase Order Date 2/26/13
PO Print Date 2/26/13

Order From : VU-SOU004

SOUTHLAND FABRICATION
411 INDUSTRIAL WAY
FALLBROOK, CALIFORNIA 92028

Contact Name		**Buyer**	Chantal Lavoie
Vendor Phone	760-723-4006	**Requisition Nbr**	
Vendor Fax	760-723-4604	**Tax Resale Nbr**	10127-2607
Vendor Account Nbr		**Terms**	Net 30
		Currency	USD
		FOB	Destination-Collect

Ship To : DART AEROSPACE LTD 1270 ABERDEEN
HAWKESBURY, ON K6A 1K7
CANADA

FAXED (613)632-1056

Line Nbr	Reference / Revision ID / Vendor Part Number	Description / Mfg ID	Req Date / Taxable	Req Qty / Unit of Measure	Ship Method	Unit Price	Extended Price
1	646.3710P	Doubler	4/05/13 Yes	30.00 Each	FedEx PI collect	$268.0000	$8,040.00

Special Ins: AS PER DWG 646.3710 REV. A
B97175
NOTE: BLACK HARD ANODIZE AND
PRIMER IS INCLUDED IN PRICE

SO13-4-5

PO Total: **$8,040.00**

CERTIFICATE OF CONFORMITY
REQ'D UPON DELIVERY

MATERIAL CERTIFICATION
REQ'D UPON DELIVERY

No substitution or deviation without consent.
Certificate of Conformity or Material Certification required (YES) NO

Change Nbr: 1 **Change Date:** 2/26/13

8650936398 38 PACKAGE LABEL
8650936398 38 COMMERCIAL INVOICE LABEL
8650936398 38 DELIVERY RECORD LABEL
8650936398 38 DELIVERY REATTEMPT LABEL

FedEx® Express International Air Waybill

FedEx Tracking Number 8650 9363 9838 Form ID No. 0402 **Customs Copy**

1 From

Date 4-3-13 Sender's FedEx Account Number

Sender's Name Jason Secola Phone 760-723-4006

Company Southland Fabrication

Address 411 Industrial way.

Address

City Fallbrook State Province Ca

Country USA ZIP Postal Code 92028

2 To

Recipient's Name B Phone 613-632-9577

Company Dart ~~Aerospace~~ Aerospace Ltd.

Address 1270 Aberdeen Dept./Floor

Address

City Hawkesbury State Province ON

Country Canada ZIP Postal Code K6A 1K7

Recipient's Tax ID Number for Customs Purposes
e.g., GST/RFC/VAT/IN/EIN/ABN, or as locally required.

3 Shipment Information ☐ For EU Only: Tick here if goods are not in free circulation and provide C.I.

Total Packages Shipper's Load and Count/SLAC 1 Total Weight 58 lbs ☒ kg ☐ DIM / / in. ☐ cm ☐

Commodity Description DETAIL REQUIRED	Harmonized Code	Country of Manufacture	Value for Customs REQUIRED
#C46 371 P Doubler			8040.00

Has EEI/SED been filed in AES? For U.S. Export Only: Check One ☐ No EEI/SED required, value $2,500 or less per Sch. B Number, no license required (NLR), not subject to ITAR. Total Declared Value for Carriage Total Value for Customs (Specify Currency)

4 Express Package Service *Packages up to 150 lbs./68 kg* For packages over 150 lbs. (68 kg), use the FedEx Expanded Service Intl. Air Waybill.

1 ☒ FedEx Intl. Priority 6 ☐ FedEx Intl. First Available to select locations. Higher rates apply.

☐ 3 ☐ FedEx Intl. Economy FedEx Envelope and FedEx Pak rate not available.

Not all services and options are available to all destinations. Dangerous goods cannot be shipped using this Air Waybill.

5 Packaging *These unique brown boxes with special pricing are provided by FedEx for FedEx Intl. Priority only.

6 ☐ FedEx Envelope 2 ☐ FedEx Pak 3 ☐ FedEx Box 4 ☐ FedEx Tube

1 ☒ Other 58 lbs. PW ☐ FedEx 10kg Box* PX ☐ FedEx 25kg Box*

6 Special Handling

1 ☐ HOLD at FedEx Location 3 ☐ SATURDAY Delivery Available to select locations for FedEx Intl. Priority only.

7a Payment *Bill transportation charges to:*

Enter FedEx Acct. No. or Credit Card No. below.

1 ☐ Sender Acct. No. in Section 1 will be billed. 2 ☒ Recipient 3 ☐ Third Party 4 ☐ Credit Card 5 ☐ Cash Check/Cheque

FedEx Acct. No. 15179324-0 Total Transportation

[redacted]

Credit Card Exp. Date Specify Currency

7b Payment *Bill duties and taxes to:* ALL shipments may be subject to Customs charges, which FedEx does not estimate prior to clearance.

Enter FedEx Acct. No. below.

1 ☐ Sender Acct. No. in Section 1 will be billed. 2 ☒ Recipient 3 ☐ Third Party 5 ☐ Cash Check/Cheque

FedEx Acct. No. 15179324-0

8 Your Internal Billing Reference First 24 characters will appear on invoice.

9 Required Signature

Use of this Air Waybill constitutes your agreement to the Conditions of Contract on the back of this Air Waybill, and you represent that this shipment does not require a U.S. State Department License or contain dangerous goods. Certain international treaties, including the Warsaw Convention, may apply to this shipment and limit our liability for damage, loss, or delay, as described in the Conditions of Contract. WARNING: These commodities, technology, or software were exported from the United States in accordance with Export Administration Regulations. Diversion contrary to U.S. law prohibited.

Sender's Signature: [signature]

This is not authorization to deliver this shipment without a recipient signature.

Received above shipment in good order and condition. We agree to pay all charges, including Customs duties and taxes as applicable, and we agree to the Conditions of Contract as stated on the reverse side of the Recipient's Copy.

Recipient's Signature:

521

PART 158410 Rev. Date 4/06 ©1994–2006 FedEx PRINTED IN U.S.A.

FedEx Tracking Number 8650 9363 9838 0402 Form ID No.

Origin Station ID	Destination Station ID	URSA Routing	Handling Units
HMTA	CA/YMXA		Total Volume (cm)

Received At 1 ☐ Reg. Stop 2 ☐ On-Call Stop 3 ☒ Drop Box 4 ☐ World Service Center 5 ☐ Station Forms Attached: ☒ CI ☐ CO